RMF 132-160
RMF 132-160 IVR

Oil-injected screw Compressors
Fixed & Variable Speed

Solid, simple, smart.
Advanced reliability in compressed air

AVAILABILITY
SERVICEABILITY
RELIABILITY
SIMPLICITY
PARTNERSHIP

TECHNOLOGY YOU CAN TRUST

MARK

User benefits

Simple Installation

- Compact and all in one system
- Innovative design
- Easy and fully protected transport

Solid Quality

- Outstanding and first-class components
- Highly reliable gearbox transmission
- Separate oil and air coolers resulting in less thermal shocks and a longer lifetime
- Perfect air filtration and cooling even in harsh condtions up to 46°C
- Full automatic control
- High quality and heavy duty motor

Easy Maintenance and Accessibility

- Excellent accessibility to service components thanks to multiple service doors
- Easy access to the coolers
- Easy oil level check
- Easy and quick check up thanks to service door and controller
- Service and cleaning is a one person job

Saving of costs

- Designed for low energy consumption and life cycle cost
- Optimal energy efficiency with integrated IVR and Energy Recovery options
- Long service intervals for lower maintenance costs and higher uptime

RMF - Gearbox driven - Fixed Speed
RMF IVR - Gearbox driven - Variable Speed

Compressed air drives your company. Consequently, choosing the right compressor is crucial. Going for our RMF range of highly adapted oil-injected screw compressors is a choice you will not regret. Bring some fresh air into your company and enjoy the strong performance and high efficiency that comes with it.

The Mark RMF comes in a range spanning from 132 up to 160kW with fixed speed (load-unload) control or variable speed (IVR) control. Energy costs and your specific requirements will help you choose the most suitable compressor for your application. Whatever model you choose, high standard components guarantee performance and design synergy ensures the easy operation you are looking for.

Variable speed control Frequency inverter regulation (IVR)

A frequency driven compressor has a working pattern with lower peaks and a smoother air profile. This is achieved by controlling the air delivery and producing only the amount of air required for the customer's application at a specific moment. The net pressure is maintained by use of a frequency inverter. As a result, the compressor consumes only the energy needed, making it very cost efficient.

Optimize your energy consumption with energy recovery

When air is compressed, heat is formed. The excess heat can be captured with an energy recovery option and channeled to other applications allowing you to save energy and cut costs. The energy recovery option integrates a heat exchanger on the oil circuit, which heats up the continuously pressurized water flow. The system is regulated automatically, and in case of limited water cooling capacity, the standard cooling system of the compressor will operate and back up the energy recovery device.

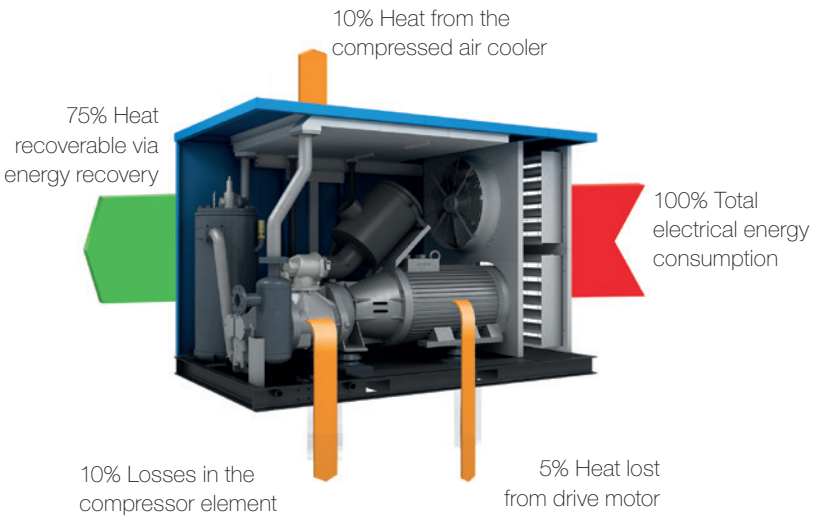

SMART TECHNICAL ADVANTAGES

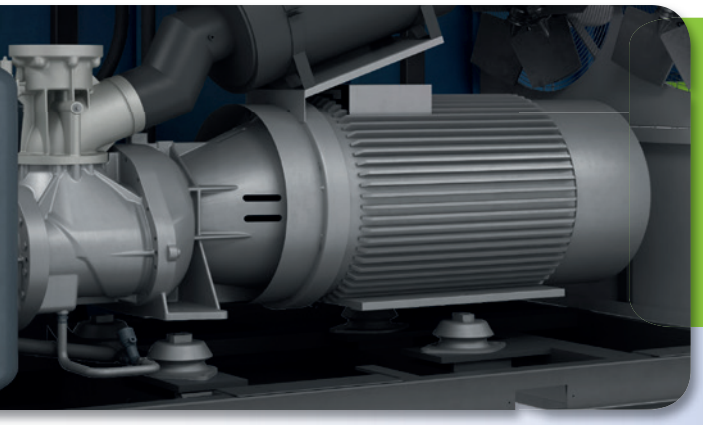

THE TROUBLE_FREE PERFORMANCE YOU ARE LOOKING FOR

- In-house designed air ends for optimal reliability and long life
- Increased Free Air Delivery (FAD) and low energy consumption
- Gearbox technology ensures efficient power transmission and high reliability

RELIABLE COMPONENT SELECTION

- In-house designed core components
- Key components as motors, inverters, electronics from reputable global suppliers

WATER SEPARATOR DRAIN

- Water separator drain as standard to remove excess water and protect downstream equipment

EASY OPERATION, ALWAYS IN CONTROL

The full range is equipped with the ES4000 ADVANCED:

- Constant pressure follow-up
- Wide choice of timers
- An integrated central controller
- Visualisation possibilities

SIMPLE MAINTENANCE

- Excellent accessibility to service components thanks to multiple service doors
- Separate air and oil cooler which reduces the thermal tension extending the lifetime of the coolers

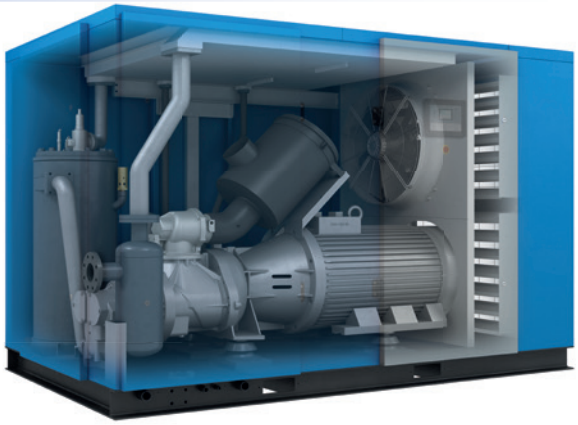

YOUR ENERGY EFFICIENT AND SOLID PERFORMANCE

RMF 132 - 160
RMF 132 - 160 IVR

Gearbox driven compressors are suitable for use with a variety of constant speed or variable speed drivers. Local energy costs and application requirements will determine the most economical method of drive for your application. Choosing the heavy duty gearbox solution offers you:

- Higher performance for less energy consumption
- Lower maintenance cost
- No transmission losses
- No belt tensioning

GEARBOX DRIVEN

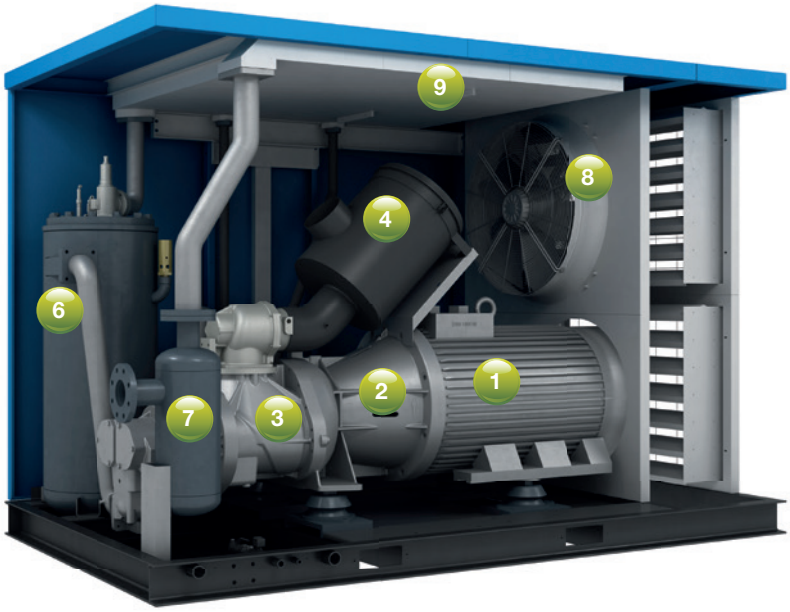

Components

1. *IE3 Premium Efficiency motor*
2. *Gear driven transmission*
3. *Air end*
4. *Standard enclosed intake filter*
5. *Intelligent controller*
6. *In house designed oil separator vessel*
7. *Standard water separator drain*
8. *Cooling fan*
9. *Separate air/oil coolers*

GEARBOX DRIVEN - FIXED & VARIABLE SPEED

Technical data

Fixed speed version	Max working pressure	Reference working pressure	Free air delivery @ reference conditions*			Motor power		Noise level **	Weight	Compressed air output diameter	Dimensions LxWxH
Model	bar	bar	m³/h	l/s	cfm	kW	hp	dB(A)	kg	"	mm
RMF 132	7	7	1516	421	892	132	180	77	3300	DN80	2800 x 1755 x 1960
	8	8	1426	396	839						
	10	10	1260	350	742						
	13	13	1087	302	640						
RMF 160	7	7	1699	472	1000	160	220	78	3650	DN80	2800 x 1755 x 1960
	8	8	1649	458	970						
	10	10	1508	419	888						
	13	13	1314	365	773						

Inverter driven version	Max working pressure	Reference working pressure	Free air delivery @ reference conditions*			Motor power		Noise level **	Weight	Compressed air output diameter	Dimensions LxWxH
Model	bar	bar	m³/h	l/s	cfm	kW	hp	dB(A)	kg	"	mm
RMF 132 IVR	7	7	454-1516	126-421	267-892	132	180	77	3550	DN80	2800 x 1755 x 1960
	8	8	428-1426	119-396	252-839						
	10	10	378-1260	105-350	222-742						
	13	13	328-1087	91-302	193-640						
RMF 160 IVR	7	7	511-1699	142-472	301-1000	160	220	78	3980	DN80	2800 x 1755 x 1960
	8	8	493-1649	137-458	290-970						
	10	10	454-1508	126-419	267-888						
	13	13	396-1314	110-365	233-773						

*Unit performance measured according to ISO 1217, Annex C, latest edition.

** Noise level measured according to ISO 2151.

All technical data for air-cooled machines, 50 Hz. For technical data of water-cooled machines, please contact your local sales force.

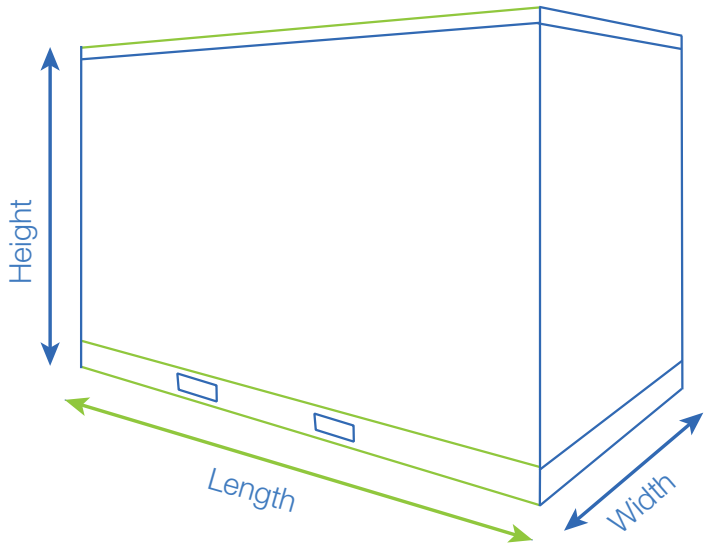

Oil injected screw compressors
Variable speed and direct driven range
RMF 132-160
RMF 132-160IVR

MARK

- A high quality product offering you technology you can trust.
- Our products are easy to use and guarantee high reliability.
- Distributors are always nearby ensuring availability of both products and support.
- Choosing our high performance products entails a partnership that will boost your business.
- Safeguarding long-term productivity through optimal serviceability and use of original parts.

ORIGINAL PART

Care. Trust. Efficiency.

Care.
Care is what service is all about: professional service by knowledgeable people, using high-quality original parts.

Trust.
Trust is earned by delivering on our promises of reliable, uninterrupted performance and long equipment lifetime.

Efficiency.
Equipment efficiency is ensured by regular maintenance. Efficiency of the service organization is how Original Parts and Service make the difference.

© 2018, Mark. All rights reserved. All mentioned brands, product names, company names, trademarks and service marks are the properties of their respective owners. Our products are constantly being developed and improved. We thus reserve the right to modify product specifications without prior notice. Pictures are not contractually binding.

6999200312

Contact your local Mark representative now!

www.mark-compressors.com